Demand Control Signal Receiver (DCSR)

Installer's Manual

ELECTRICAL+INDUSTRIAL | TOOLS+TECHNOLOGIES

TMAC™ THEW & McCANN GROUP

ACTIVE INNOVATION

TQCSI ISO 9001:2015

Quality Certified

AU1313-QC-EC-SC

BEFORE YOU START

SAFETY SYMBOLS USED IN THE GUIDE

Mandatory Action - This symbol indicates the action must be taken to avoid a hazard. Any information that follows this symbol must be obeyed to avoid possible harm.

QUALIFIED PERSON

This is a Type 1 DRED according to AS4755.1 and as such may only be installed by a qualified person i.e. electrician. A qualified person is one who is familiar with the installation, construction, operation or maintenance of the equipment and the hazards involved. In addition, this person is competent, trained and authorized to undertake the work involved in accordance with established safety and working procedures.

GENERAL PRECAUTIONS

Read and understand this guide before operating this equipment.

The TMAC Demand Control Signal Receiver (DCSR) is to be used only by qualified personnel and must be used in conjunction with the user's own working and safety procedures, without compromising the integrity of the TMAC product supplied.

Follow all safety instructions contained within this guide.

DESCRIPTION

The DCSR receives AFLC (Audio Frequency Load Control) signals via the mains input from the electricity supplier (the same signal used to switch off-peak hot water systems) and allows the electricity distributor to control network peak demand by instructing the connected air conditioner to cap its electrical load.

INSTALLATION INSTRUCTIONS

- The Demand Control Signal Receiver (DCSR) should preferably be installed internally within the air conditioning indoor or outdoor unit (subject to manufacturers' installation instructions). This will avoid the cables and casing being subjected to ultraviolet light or mechanical damage.
- This product should be **MOUNTED VERTICALLY WITH THE CABLE ENTRY FACING DOWN (In line with "THIS WAY UP" marking on the case)** to prevent water ingress via the cable entry.
- Some manufacturers require an adapter board to connect the DCSR to. Refer to Energex Peak Smart website and check for models marked with " * ".
- The DCSR's "POWER CABLE" is connected in parallel with the air conditioner's mains supply and in accordance with the wiring rules of AS / NZS 3000.
- The DCSR's "CONTROL CABLE" connects between the DCSR and the air conditioner's dedicated Demand Response Mode (DRM) connector. The DRM connector may be an RJ45 socket, or a set of screw terminals depending on the air conditioner mode (refer to 'Option A' or 'Option B' diagram).
- For units fitted with screw terminals, the RJ45 to screw terminal adapter is to be used. The product is intended to be connected to the fixed wiring, and installed in a location where it is not likely to be subjected to mechanical damage.
- The internal components within the DCSR are factory set and should never be accessed.

WIRING OVERVIEW

The TMAC DCSR has two cables to connect, a POWER cable and a CONTROL CABLE.

The power cable is used to supply mains power to the DCSR.

The control cable is connected to a special dedicated Demand Response Mode (DRM) connector on the air conditioner. Consult the installer's manual for the air conditioner to find the location of the DRM connector. It will either be located in the head unit or the compressor unit.

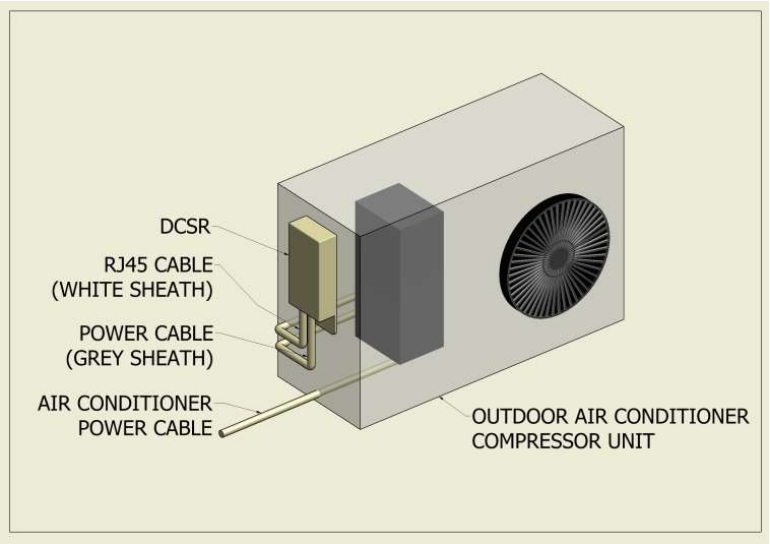

CONTROL CABLE WIRING DIAGRAM

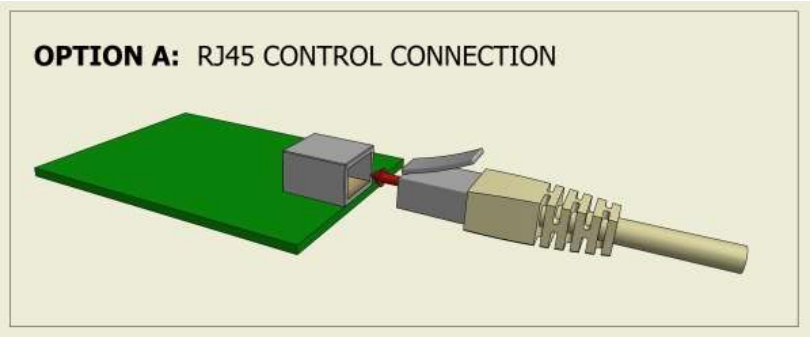

The TMAC DCSR CONTROL CABLE is connected to the dedicated DRM connector on the air conditioner. The connector will either be an RJ45 connector (OPTION A), or a set of screw terminals (OPTION B).

NOTE: THE DRM CONNECTOR IS ALWAYS SEPARATE FROM THE POWER CABLE CONNECTIONS

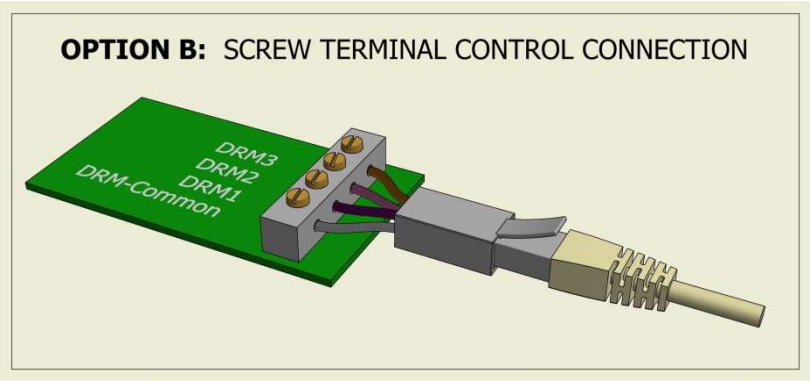

The RJ45 Adapter Cable is used to connect the TMAC DCSR to air conditioners fitted with SCREW terminals as the DRM connection. The table below shows which coloured cable must be connected to each DRM terminal.

NOTE: DO NOT CONNECT THE CONTROL CABLE TO THE POWER CABLE CONNECTIONS

DRM Terminal	Cable Colour
DRM1	Purple
DRM2	Pink
DRM3	Orange
DRM-Common	Grey

NOTE: CHECK MANUFACTURE'S WIRING GUIDELINES.

POWER CABLE WIRING DIAGRAM

The TMAC DCSR POWER CABLE supplies mains power to the TMAC DCSR. The POWER CABLE is connected to the incoming mains supply for the air conditioner.

If the supply cord is damaged, it shall be replaced by the manufacturer or its service agent or similarly qualified person in order to avoid a hazard.

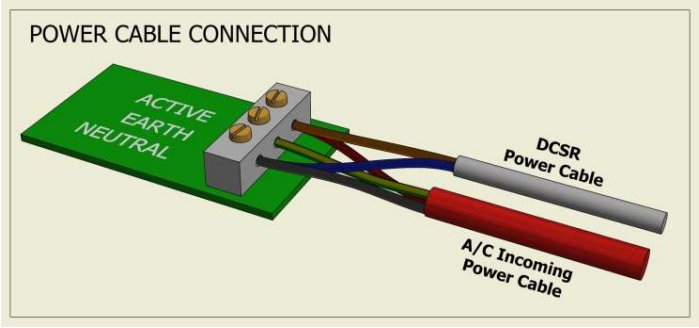

DEFECTS / WARRANTY

DEFECTS

Goods are warranted to be free from defects. Provided they have been used strictly as recommended and subjected only to fair wear and tear or goods (including parts within) which are found to be defective within 90 days after delivery to the Buyer will be repaired or replaced at the option of the Seller and at its expense. Repair or replacement by the Seller is the exclusive remedies of the Buyer.

WARRANTY

To the maximum extent permitted by law, the Seller makes no warranties, either express or implied, as to merchantability, fitness for purpose or otherwise with respect to the Goods other than in paragraph above and as required by statute. The Seller is not liable for any prospective profits or special, indirect or consequential damages or any general loss or damage, or for any expense resulting from use by the Buyer or others of defective Goods. The Seller's liability is limited to no more than the sale price of the Goods plus replacement delivery charges. Prior authority for the return of goods is required by the seller.

Please contact the seller by email peaksmartadmin@energex.com.au or phone 13 12 53 for claims related to defective / warranty of goods provided.

FOR THE FULL TERMS AND CONDITIONS PLEASE REFER TO TMAC "STANDARD TERMS OF TRADE".